THE YORKTOWN WINDMILL PROJECT

Mechanical References for the Wind Drive System

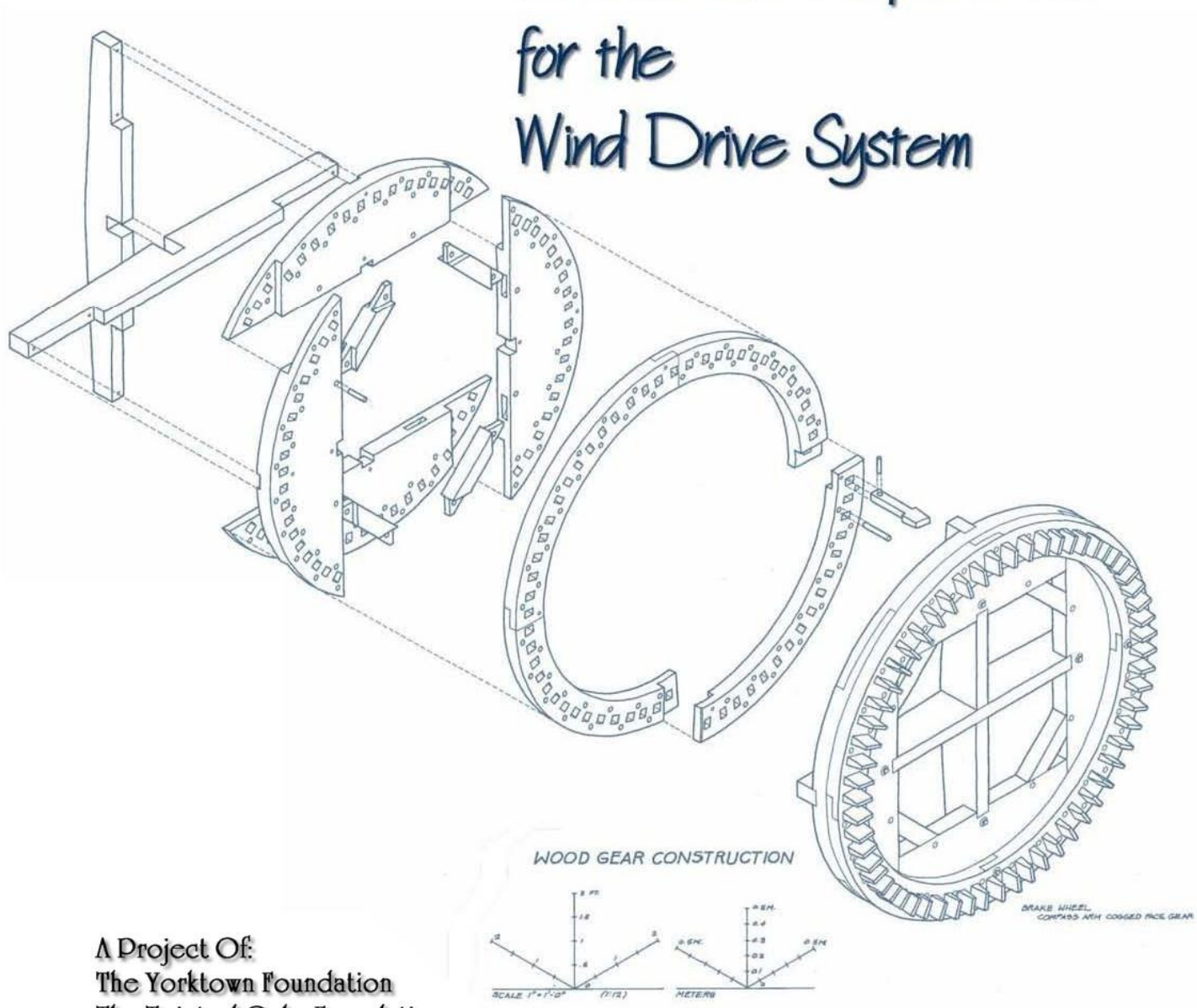

A Project Of:
The Yorktown Foundation
The Twisted Oaks Foundation
Colonial National Historical Park
York County, Virginia
and
Thomas Jefferson National Accelerator Facility

Mechanical References for the Wind Drive System

I. OVERVIEW

1. Yorktown Windmill Mechanical Design

Because of a lack of documentation regarding the structure, engineering and drive system of the original Yorktown Windmill, the components for the new design will be based on documentation from other windmills of the same time period. Support for engineering, structural and architectural design will be provided by volunteers from Thomas Jefferson National Accelerator Facility in Newport News, VA.

2. Design Assumptions and Constraints

In order to provide a framework for developing the new design that will ensure economy and consistency, the following assumptions and constraints are provided.

2.1. Windmill Type

The design will be an ***18th Century Smock Windmill*** configured to grind corn and grist. The tower will be an octagonal fixed base of standard frame construction with outer walls that taper at 8 degrees from bottom to top. The vanes are affixed to a windshaft that enters the mill through a cap that sits atop the tower. This cap can be rotated 360 degrees to turn the vanes into the wind.

2.2. Construction Material

Whenever possible, all mechanical elements should be constructed from wood. Iron elements should only be employed:

a. ***Where they would have traditionally been used***
b. ***Where they are required for safety or code compliance***

2.3. Windmill Vanes

The windmill will have **four** vanes that are angled at 18 degrees and will be configured to rotate counter-clockwise. The vanes provide a lattice structure over which sails can be installed to facilitate operation.

2.4. Windshaft

The wind shaft will be installed at 8 degrees above horizontal and will enter the cap through a cased window opening installed in a dormer structure.

2.5. Cap Rotation Mechanism

Because the mill's vanes must be turned into the wind in order to operate, it is necessary for the windmill's cap to rotate on the base. The turning mechanisms that have been used include tail poles, fan tails, and a cap gear that is operated from either the exterior or interior of the mill. In order to ensure the security of the cap and to prevent unauthorized reconfiguration, an internal cap-gear system will be used to rotate the cap.

2.6. Windmill Levels

The windmill will have no more than three distinct floors.

a. Level One – The Meal Floor

This is the entry level into the windmill. As corn meal is passed through the mill stones it is delivered to this floor through a chute.

b. Level Two – The Stone Floor

The mill stone assembly is installed on this floor and is powered by the main shaft which enters from the ceiling.

c. Level Three – The Bin Floor

This floor contains the hoppers through which the un-ground corn is introduced to the grindstones. The main shaft passes through this floor to the stone floor below. The room has no ceiling and provides clear visibility to the windshaft, brake wheel, and wallower which are installed in the cap.

Note: In some designs the meal floor and stone floor are integrated into a single level where the millstone assembly is mounted on a platform.

2.7. Mill Stone Assembly

The mill will have a single pair of mill stones installed on the stone floor. The stones may be driven directly from the main shaft or by means of a great spur wheel.

a. Active Stone

This stone will be supported by a shaft that extends downward to the meal floor. The separation between the active stone and the fixed stone is governed by the **stone support beam** and a system of wedges on the meal floor.

b. Nether Stone

This stone is fixed and rests directly on the *'stone floor'*.

II. COMPONENT REFERENCES

1. Wind Vanes

It is recommended that the wind vanes be designed in a one-over-two configuration as seen in the Hook, Beebe and Gardiner's Island Windmill designs.

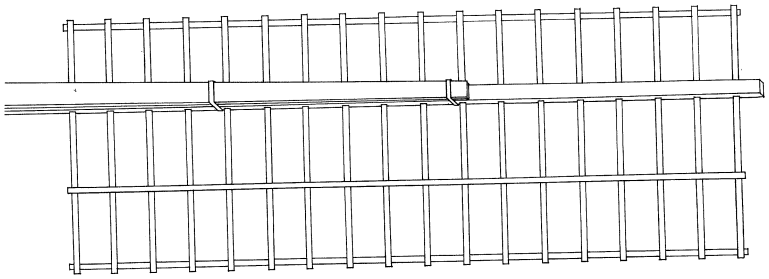

Wind Vane from Hook Windmill

2. Windshaft

The wind vanes are attached directly to the windshaft which is the primary drive mechanism for the mill. In the provided design, the windshaft is a 12″ x 12″ beam that has been *'turned'* to fit snuggly into the neck bearing (front) and the thrust bearing (rear).

The brake wheel is fitted around the windshaft and transfers power from the near horizontal windshaft to the vertical main shaft.

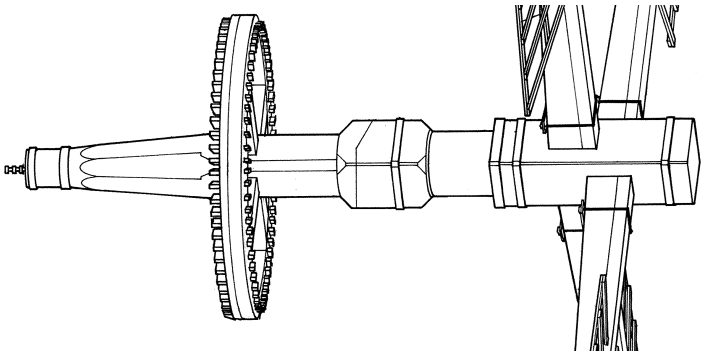

Gardiner's Island Windshaft with Vanes and Brake Wheel

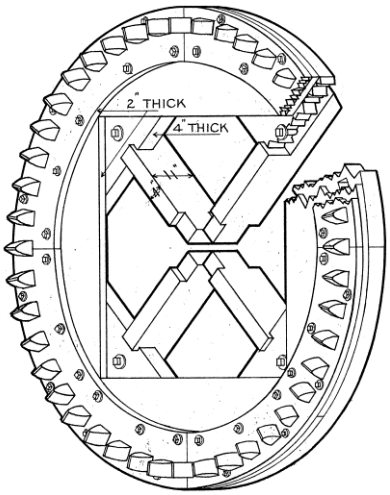

Chatham Windmill Brake Wheel

3. Brake Wheel

The brake wheel is a wooden gear that is attached directly to the windshaft. It gets its name from the brake assembly that is attached to it allowing the operator to stop the windshaft from turning.

During operation, the teeth on this gear interact with the wallower, a cage gear at the top of the main shaft, transferring power to the main shaft and the grindstones on the floor below.

4. Brake Assembly

The brake assembly is used with the brake wheel to slow or stop the turning of the wind vanes. There are a variety of documented designs for brake assemblies, but one of the more comprehensive explanations comes from the plans of the Old Windmill of Nantucket.

This diagram shows the brake assembly in relation to the windshaft, brake wheel, wallower and main shaft.

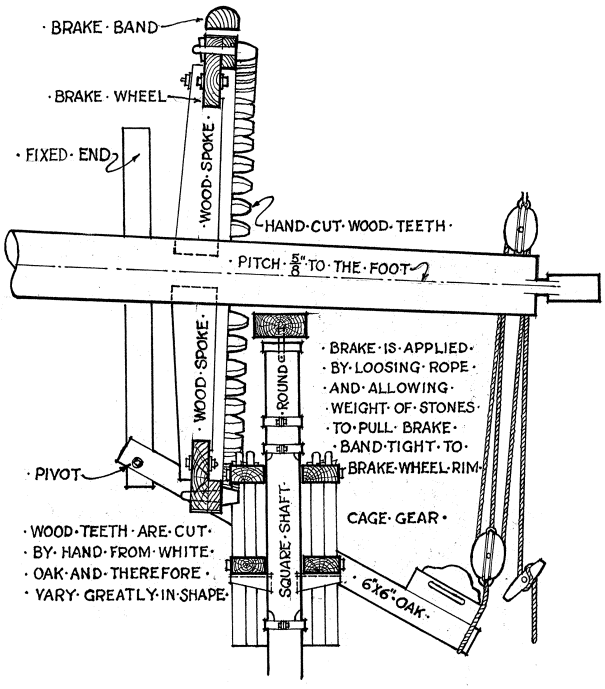

Brake Assembly from the Nantucket Windmill

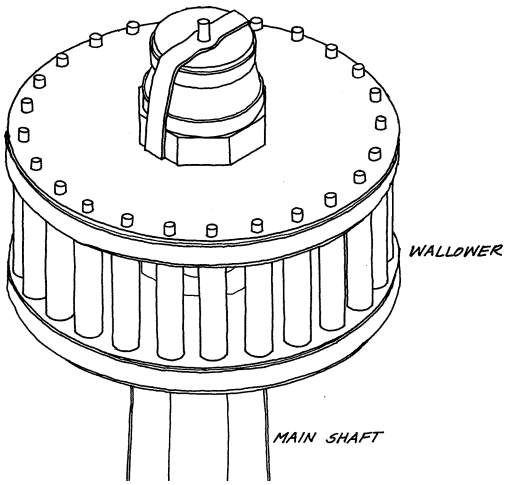

Wallower and Main Shaft from the Hook Windmill

5. Wallower and Main Shaft

The wallower is a cage gear affixed to the top of the main shaft. It has solid oak top and bottom plates that are linked by a series of wooden dowels. These connecting dowels serve as the gear's teeth.

The wallower is turned by the windmill's brake wheel and directly turns the main shaft.

6. Great Spur Wheel

The great spur wheel is a wooden gear that may be directly attached to the main shaft. This gear is optional and may be eliminated if the main shaft is used to directly drive the active stone. When employed, this gear can be used to transfer power to one or more stone nuts that drive grinding stones. Typically the great spur wheel is also used to transfer power to auxiliary components such as cob crushers, conveyer belts or screeners.

The attached diagram shows an overhead view of the great spur wheel from the Gardiners Island Windmill.

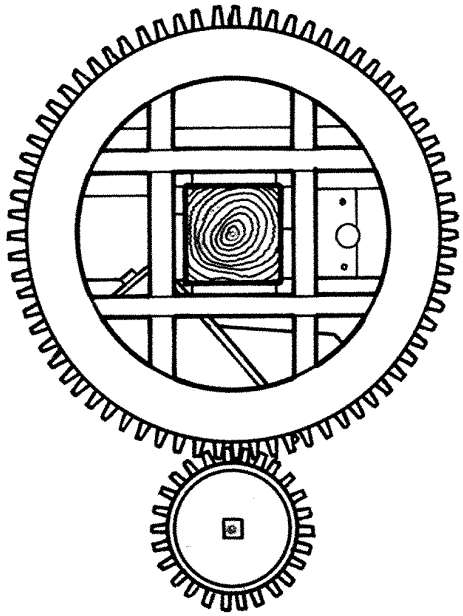

Great Spur Wheel from the Gardiner's Island Windmill

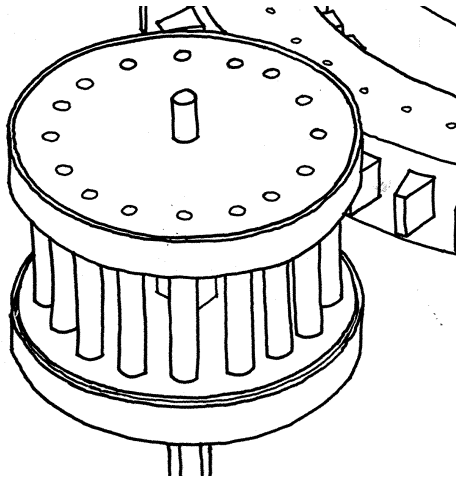

Stone Nut from the Hook Windmill

7. Stone Nut

The stone nut is a cage gear used to transfer power from the great spur wheel to the millstone. This gear is optional and is only employed when a great spur wheel is used to distribute power.

8. Millstones

The diagram at right shows the two primary millstones installed in the millstone assembly. The ***active stone*** is installed on top and is directly driven by the main shaft. The ***nether stone*** *(identified as the fixed stone)* is installed on the bottom and is static.

Un-ground corn is introduced into the system through the wooden hopper and is ground between the active stone and the nether stone. Once the meal is sufficiently fine, it can escape the millstone system and exits through a chute into the meal box.

The active stone is affixed to the shaft by use of an iron ***crowfoot.***

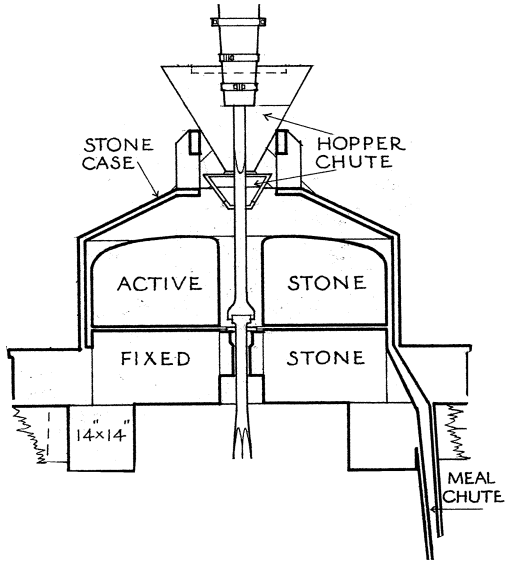

Millstone Assembly from Chatham Windmill

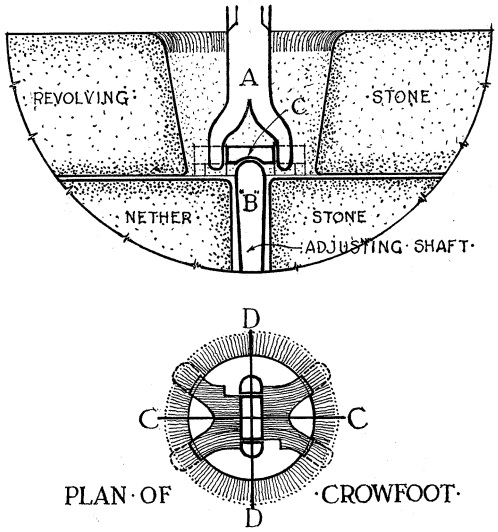

Crowfoot Detail from the Old Nantucket Windmill

9. Crowfoot

The crowfoot is an iron mechanism that serves two purposes. First, it is the means by which the main shaft is connected to the active stone. A connecting plate is installed in the bottom of the active stone and the 'claws' of the crowfoot penetrate that plate providing a means for transferring power from the main shaft to the millstone.

The second purpose of the crowfoot is to allow the height of the active stone to be adjusted in order to facilitate the production of finer (or courser) meal.

10. Stone Case

The stone case is a wooden container that surrounds the millstones and provides containment for the corn as it is being ground. The stone case has a hopper into which the un-ground corn is introduced and has a meal chute where the meal or grist is ejected.

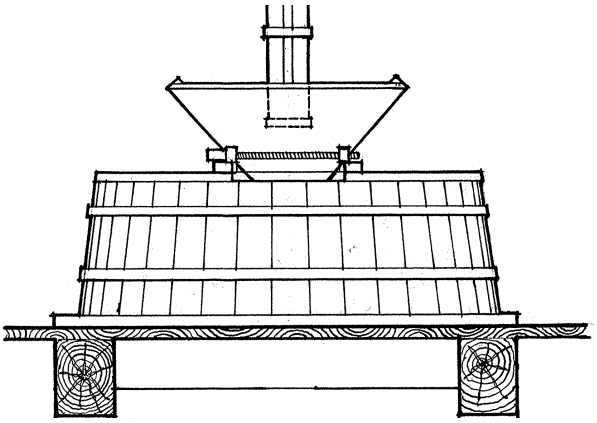

Stone Case from the Old Nantucket Windmill

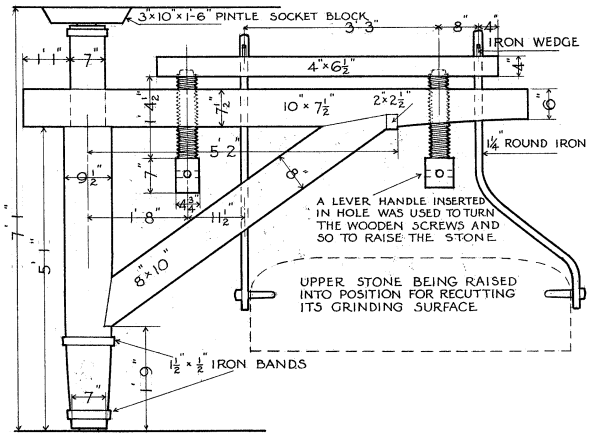

Stone Hoist from the Chatham Windmill

11. Stone Hoist

Typically a combination of wood and iron, the stone hoist is a crane system used to raise the active stone so that its grinding surface can be re-cut. This device is installed in a socket allowing the active stone to be lifted and rotated to one side in order to service the nether stone.

When not in use, the stone hoist is either removed or rotated to a stowed position.

12. Stone Clearance Adjustment

The Stone Clearance Adjustment screw allows the separation between the active stone and the nether stone to be adjusted in order to control the coarseness of the meal that is being produced. A variety of adjustment mechanisms have been identified including systems of wedges and governors, however the adjustment screw appears to be one of the most straightforward approaches.

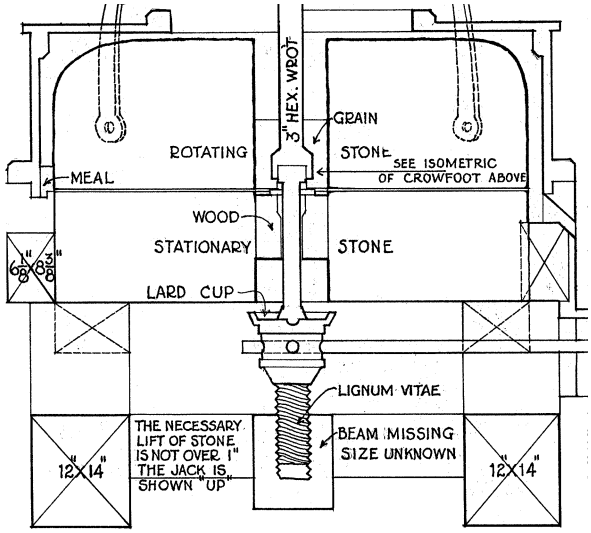

Clearance Adjustment from the Cape Cod Windmill

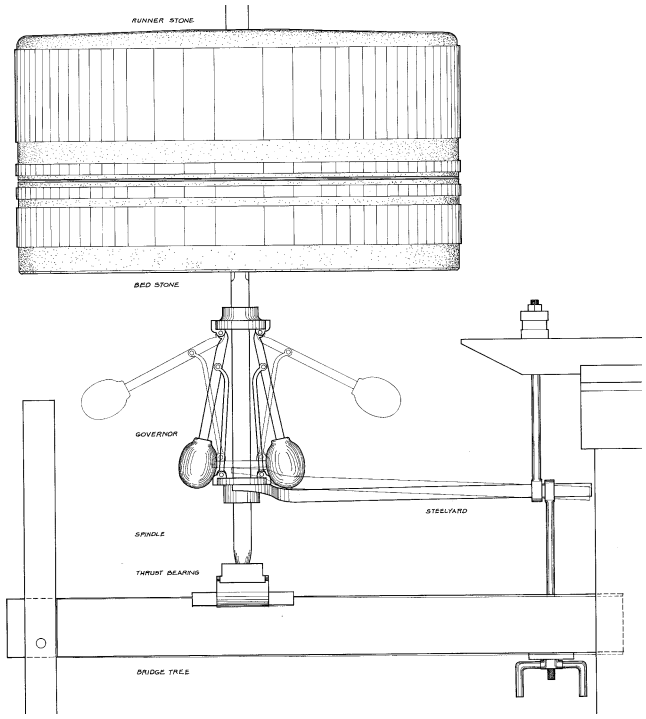

Governor from the Windmill at Water Mill

13. Governor

An alternative mechanism for performing stone clearance adjustments is the governor. The governor consists of a pair of rotating weights that are lifted by centrifugal force as the wind vanes come up to speed.

The governor is attached to a counterweighted **bridge-tree** that is used to lower the active stone into position once it achieves operable speeds.

14. Cap Gear

The cap gear is a wooden gear assembly installed in the cornice that allows the cap of the windmill to be rotated into the wind.

The gear is actuated using a capstan and lever that are located on a lower floor of the mill.

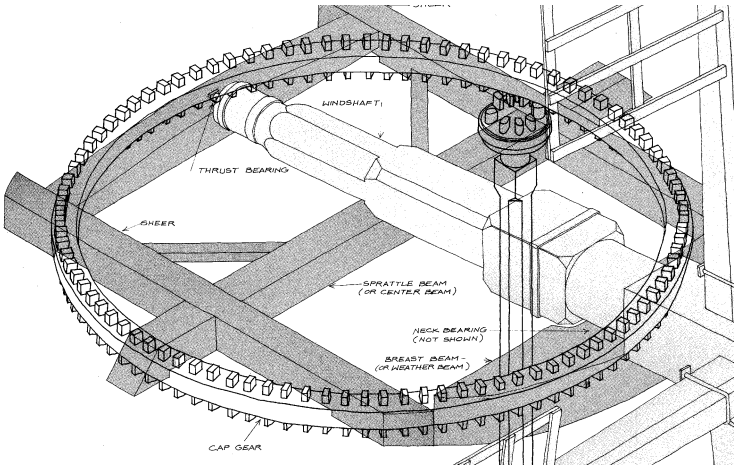

Cap Gear from the Gardiner's Island Windmill

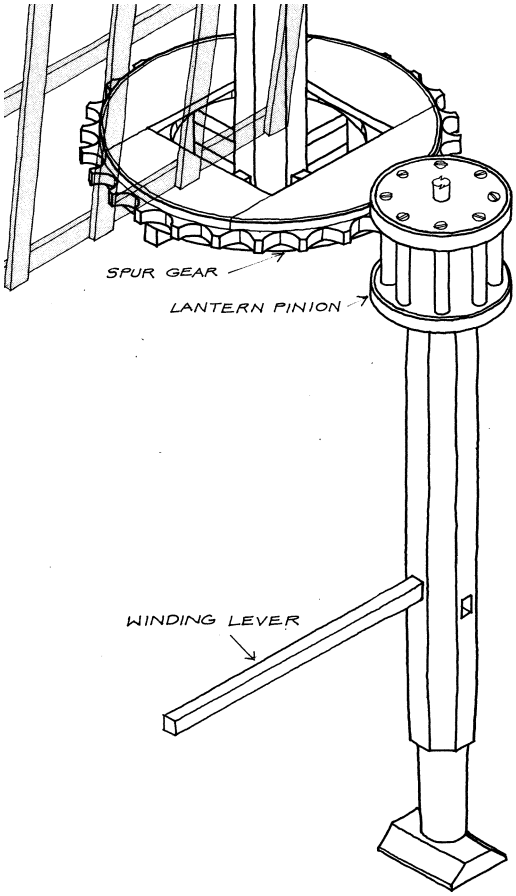

Winding Assembly from the Gardiner's Island Windmill

15. Winding Assembly

This winding assembly consists of a capstan and spur gear that are attached to a shaft that extends into the windmill's cap. When operated, this assembly engages the cap gear and can be used to turn the vanes into the wind.

When the winding assembly is not in use, the winding lever can be removed and stored. The winding assembly is typically located on the meal or stone floor in order to provide adequate room for the winding lever to be employed.

III. ISOMETRIC OF COMBINED COMPONENTS

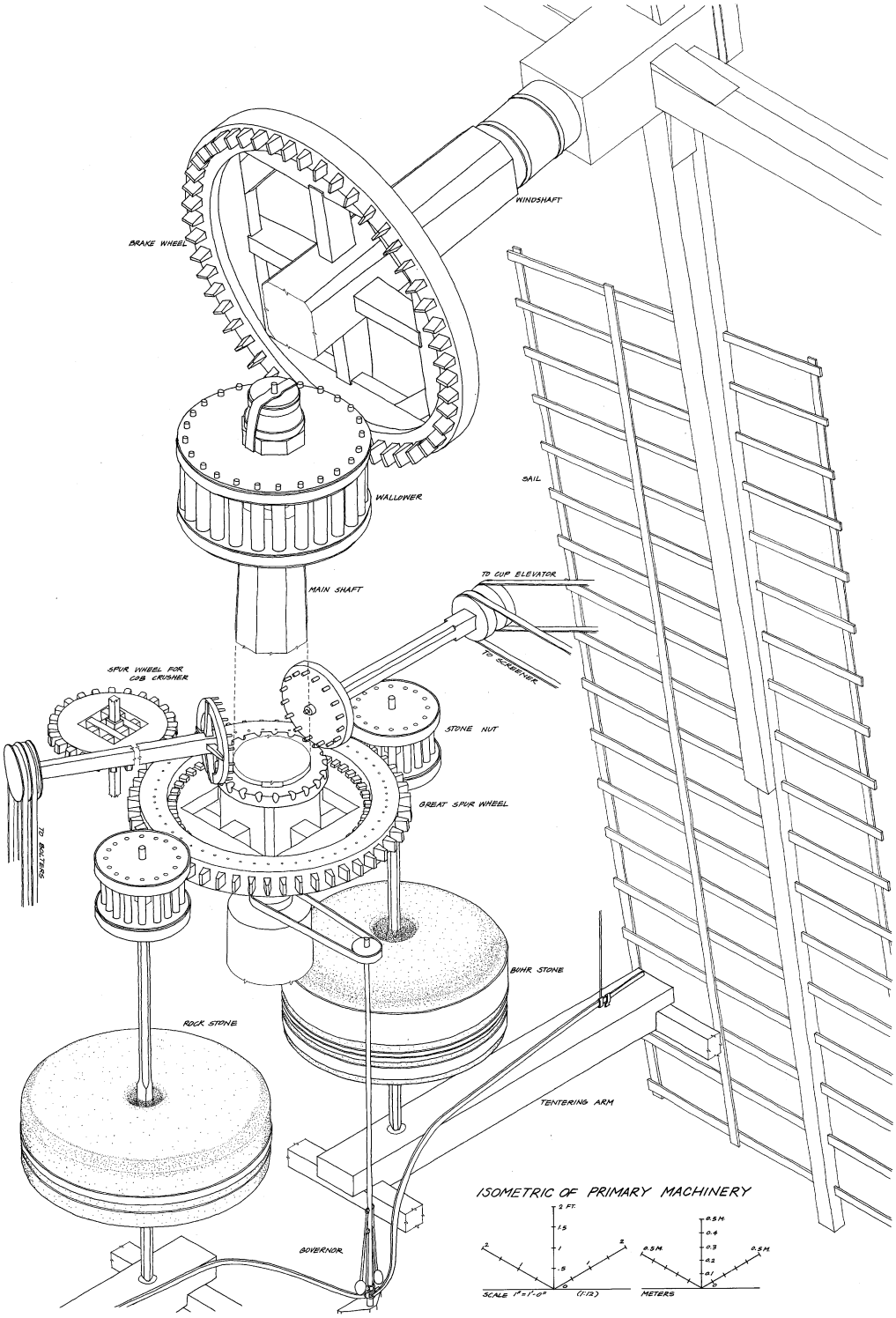

Isometric Representation of Components from the Hook Windmill

Contact Information

For additional information, please contact Walt Akers.

Phone: 757/846-4810

E-mail: akers.walt@gmail.com

Mail: 110 Kenneth Drive
Seaford, Virginia 23696

Works Cited

Marcus, Grania Bolton. *Historic American Engineering Record - Windmill at Water Mill.*
U.S. National Park Service, July 1978.
<http://memory.loc.gov/pnp/habshaer/ny/ny1100/ny1142/data/003.tif>
Retrieved February 5, 2008.

Hoeft, K and Long, C. *Historic American Engineering Record – Windmill at Water Mill - 1800.*
U.S. National Park Service, Delineated 1976.
http://memory.loc.gov/pnp/habshaer/ny/ny1100/ny1142/sheet/00001r.tif
Retrieved 7 February 2008.

Glidden, Henry Orange. *Historic American Building Survey – Chatham Windmill.*
U.S. National Park Service, February 1935.
<http://memory.loc.gov/pnp/habshaer/ma/ma0400/ma0493/sheet/00000r.tif>
Retrieved 6 February 2008.

Pirola, Louis. *Historic American Building Survey – Heideman Mill.*
U.S. National Park Service, Delineated 1934.
<http://memory.loc.gov/pnp/habshaer/il/il0300/il0305/sheet/00000r.tif>
Retrieved 6 February 2008.

Palma, J. *Historic American Building Survey – The Heideman Mill.*
U.S. National Park Service, Delineated 1934.
<http://memory.loc.gov/pnp/habshaer/il/il0300/il0305/sheet/00000r.tif>
Retrieved 6 February 2008.

Hoeft, K and Long, C. *Historic American Engineering Record – Gardiners Island Windmill – 1795.*
U.S. National Park Service, Delineated 1978.
<http://memory.loc.gov/pnp/habshaer/ny/ny1100/ny1136/sheet/00001r.tif>
Retrieved 6 February 2008.

Hefner, Robert J. *Historic American Engineering Record – Gardiner's Island Windmill.*
U.S. National Park Service, August 1977.
<http://memory.loc.gov/pnp/habshaer/ny/ny1100/ny1136/data/003.tif>
Retrieved 6 February 2008.

Hoeft, K and Long, C. *Historic American Engineering Record – Beebe Windmill - 1820.*
U.S. National Park Service, Delineated 1976.
http://memory.loc.gov/pnp/habshaer/ny/ny1200/ny1231/sheet/00001r.tif
Retrieved 7 February 2008.

Hefner, R and Paxton, G. *Historic American Engineering Record – Beebe Windmill.*
U.S. National Park Service, April 1984.
<http://memory.loc.gov/pnp/habshaer/ny/ny1200/ny1231/data/003.tif>
Retrieved 7 February 2008.

Hoeft, K and Nicoletti, L. *Historic American Engineering Record – The Hook Windmill - 1806.*
U.S. National Park Service, Delineated 1975.
< http://memory.loc.gov/pnp/habshaer/ny/ny1200/ny1247/sheet/00001r.tif>
Retrieved 7 February 2008.

Hefner, Robert. *Historic American Engineering Record – Hook Windmill.*
U.S. National Park Service, April 1984.
< http://memory.loc.gov/pnp/habshaer/ny/ny1200/ny1247/data/005.tif>
Retrieved 7 February 2008.

Linnett, John E. *Historic American Building Survey – Old Windmill - Nantucket.*
U.S. National Park Service, Delineated 1936.
<http://memory.loc.gov/pnp/habshaer/ma/ma0800/ma0828/sheet/00000r.tif>
Retrieved 7 February 2008.

Linnett, John E. *Historic American Building Survey – Cape Cod Windmill.*
U.S. National Park Service, Delineated 1934.
<http://memory.loc.gov/pnp/habshaer/ma/ma0500/ma0500/sheet/00000r.tif>
Retrieved 7 February 2008.